Division 33 | Utilities

This section includes guidelines and requirements for the design and construction of utilities and other items covered in Division 33. The standards listed here are specifically for the utilities located outside buildings. Unless specifically noted, all standards apply to both the healthcare campus and the education campus.

The standards are a resource for the designer of record. The requirements are to be reviewed by the design team and incorporated into the contract documents. The standards themselves will not be included in the contract documents. It is the responsibility of the design team to incorporate them throughout the drawings and specifications.

The standard is not intended to encompass all components required in a complete utility design, but to indicate the university's preferences where they exist. Exceptions to these standards may be considered on a case-by-case basis for extraordinary projects or where value engineering is required. All deviations must be approved by the Capital Projects Project Manager.

Designers are encouraged to present the university with new or different systems, equipment, or materials when they may provide a better or more valuable product.

Sections

Section 33 0500 | Common Work Results for Utilities

Section 33 0513 | Vaults for Steam and Chilled Water

Section 33 0526 | Utility Identification

Section 33 1100 | Water Utility Distribution Piping

Section 33 3000 | Sanitary Utility Sewerage Piping

Section 33 4100 | Storm Utility Drainage Piping

Section 33 5100 | Natural-Gas Distribution

Section 33 6100 | Hydronic Energy Distribution (Chilled Water)

Section 33 6300 | Steam Energy Distribution

Section 33 0500 | Common Work Results for Utilities

1. GENERAL BACKFILL REQUIREMENTS FOR ALL UTILITIES
    A. Limestone free sand is the preferred backfill material and shall be used unless otherwise directed or approved.
    B. A 4” layer of sand shall be placed and tamped in the trench to provide a uniform bedding for the piping system. After the piping is installed, the entire trench shall be evenly backfilled with sand in 6” compacted layers to a minimum height of 6” above the top of the insulated piping system. The remaining trench shall be evenly and continuously backfilled in uniform layers with suitable excavated soil to finished grade level.
    C. The remaining backfill shall be specified in the Earthwork specifications for the project.
    D. There shall be a special inspector present to witness backfill operations and perform testing to ensure the installation achieves a consistent compaction rate measuring 95% or greater for the Standard Proctor Test.
2. GRATE REQUIREMENTS
    A. All grates on walking surfaces shall meet ADA requirements; “heel proof” grates are not required. This includes all grates with openings such as storm inlets and vault vents.

Section 33 0513 | Vaults for Steam and Chilled Water

1. GENERAL
    A. See attached details for all steam and chilled water vault requirements. Note that this is only an example. Specific vault details should be developed for all new steam vaults.
    B. Vaults should be designed for each specific project to provide adequate access to maintain and replace all components inside the vault.
    C. Vaults and piping shall be designed such that pipes shall penetrate vaults at right angles.
    D. Pipe anchors shall be separate from the vaults, i.e. not a monolithic pour.
    E. Vaults shall be waterproofed. No external drainage shall be routed to the vault or its sump pump.
2. Detail drawings should be specific to each vault showing:
    A. Piping and valve arrangements and sizes
    B. Sump pump
    C. Lighting, power, and outlets
    D. Ladders and hatches
    E. All required end of main traps and drains
    F. Exhaust fan and air intakes
3. Provide 3D orthogonal views of each vault.
4. Electrical

A. Electrical boxes, outlets, switches, etc. are to be NEMA 4 rated. No PVC conduit is allowed in steam vaults.

B. Receptacles for sump pumps shall be GFCI and on emergency power.

C. Receptacles and light switches to be mounted 48” above vault floor.

D. Light fixture is to be rated appropriately for the heat and wet conditions.

5. Openings

A. Vault openings in roadways and parking lots are to be dual cast iron lids with a 20” access lid nested in a 48” vault access lid. Assembly shall be H-25 rated. Basis of design: Neenah Foundry Company R-1741-F Frame and Lid.

B. Vault openings not in roadways are to be aluminum hatch-style lids, 36” x 36”. To have 316 SS hardware and lift assistance. It shall be traffic-rated. Bilco, Type J-AL Channel Frame with H-20 Rating or approved equal.

6. Accessories

A. Provide redundant sump pumps in a recessed sump pit – Tsurumi Pump HSZ or approved equal. Sump pump is to discharge to the nearest sanitary structure. The discharge piping shall be 3” ductile iron piping and shall be shown on the site plan.

B. A float sensor shall be provided to monitor high water level. Designer to coordinate with UK UEM to determine closest location to tie the float sensor into existing controls.

C. Provide pressure gauges on all branches leaving vault on the leaving side of the isolation valves. Gauges to be Trerice 4 ½” dial gauges, non-liquid filled, sized for 200% of working pressure.

D. The ladder shall be aluminum with dual extendable side uprights which lock in the upright position. Ladder shall be OSHA compliant. Pipeline Products VL-100 or approved equal.

E. The ventilation fan shall be Dayton Model 484x55 or approved equal.

7. See attached details for vault wall penetrations.

Section 33 0526 | Utility Identification

1. GENERAL REQUIREMENTS

A. Brass utility markers shall be provided at each building entrance, at each change of direction, and at each road crossing.

B. Projects should make every effort to include markers for unmarked existing utilities within the boundaries of the new project.

C. Brass markers must be set flush in concrete when placed in the ground or roadbed.

D. See Attachment 1 – Utility Marker Detail.

E. Tracer Wire – Provide #14 (min.) Type TW insulated copper wire run close to all underground plastic pipes. Tape to the pipe. Do not spiral around pipe.

F. Provide plastic warning tape above all utilities. Use UK standard color and marking for each utility.

2. UTILITY LEGEND

A. The following names/abbreviations are to be used on utility markers

Utility	Abbreviation
Waterline	Waterline
Sanitary Sewer	Sanitary Sewer
Storm Sewer	Storm Sewer
Chilled Water Supply	CWS
Chilled Water Return	CWR
High Pressure Steam	HPS
Medium Pressure Steam	MPS
Low Pressure Steam	LPS
High Pressure Condensate Return	HPR
Pumped Discharge Return	PDR
Natural Gas	Nat. Gas
Communication Duct Bank	Com.
12 KV Electric	12 KV Electric
4 KV Electric	4 KV Electric
480 V Electric	480 V Electric
208 V Electric	208 V Electric

3. PAINTING

A. All utilities in tunnels and vaults are to be painted according to the color chart found in the Division 22 and Division 23 standards.

Section 33 1100 | Water Utility Distribution Piping

1. PIPING AND VALVE SCHEDULE

	Domestic Cold Water, Underground	All sizes	Type K Hard Copper	Wrought copper lead free solder (150 lb. flanged or threaded gate or ball valves)
	Domestic Cold Water, Underground	4” and above	Cement-lined ductile iron pipe	Mechanical-joint ductile iron pipe suitable for 150 psig working pressure

2. TESTING

A. System shall be hydrostatically tested to 150 psig. Test to be witnessed by a UEM representative.

Section 33 3000 | Sanitary Utility Sewerage Piping

1. GENERAL DESIGN REQUIREMENTS

A. During design, a camera inspection shall be performed on the existing mains and/or lines being used for new projects.

B. Any sanitary drainage structure located within 20’ of steam or steam condensate may not be plastic.

2. PIPING SCHEDULE

	Underground Facility Sanitary Sewer	2” and above	Service weight hub & spigot cast iron pipe - ASTM A74	Gasketed joints

	Underground Facility Sanitary Sewer (Alternate*)	2” – 10”	Schedule 40 PVC (White)	Not to be used within 20’ of steam or steam condensate

*Requires approval from CPM Project Manager. Piping from building to first manhole to be cast iron at minimum.

3. TESTING
   A. System shall be tested with air to 5 psig. Test to be witnessed by a UEM representative.
4. GREASE INTERCEPTORS
   A. All grease interceptors shall be exterior. Interior units shall not be allowed except under extenuating circumstances and approved in advance by the Capital Projects Project Manager and LFUCG.
   B. Per LFUCG requirements, grease interceptor size shall be 1000 gallons minimum, or larger if required to meet calculated loads.
   C. An LFUCG Grease Interceptor Permit application is required to be submitted to the LFUCG Division of Water Quality during the design phase and UK EQM should be copied on all application/permit correspondence.
   D. The grease interceptor will need to be located where it can be easily accessed for inspection and routine cleaning and where it will not cause odor issues. If located in loading dock areas, it should be in a location not blocked by deliveries/compactors.
   E. The LFUCG Grease Interceptor Standard Drawing should be used as a design.

Section 33 4100 | Storm Utility Drainage Piping

1. PIPING AND VALVE SCHEDULE

	Underground Storm Sewer	2” – 10”	Service Weight Hub & Spigot Cast iron Pipe & fittings	Gasketed joints
	Underground Storm Sewer (Alternate*)	2” – 10”	SDR-35 PVC (Green)	Not to be used within 20’ of steam or steam condensate
	Underground Storm Sewer	12” and Larger	Reinforced concrete pipe	

*Requires approval from CPM Project Manager

2. STORM STRUCTURES
   A. Storm structures located within 20’ of steam or steam condensate may not be plastic.

Section 33 5100 | Natural-Gas Distribution

1. GENERAL
   A. Natural gas materials and installation methods are to follow local gas company’s standards.

Section 33 6100 | Hydronic Energy Distribution (Chilled Water)

1. GENERAL

   A. Piping shall be new, full weight, and of sizes shown on the drawings.

   B. Piping shall be installed at the locations shown on the construction drawings, properly graded and secured to ensure noiseless circulation throughout the system. Supply and Return piping shall be properly erected to prevent the formation of air and water pockets.

   C. Manual drains shall be provided at all low points. Specifically provide drains on each side of every isolation valve inside vaults.

2. DIRECT-BURIED CHILLED WATER PIPING

   B. All underground Chilled water and supply piping shall be Restrained Joint Ductile Iron Pipe, suitable for 350 psig working pressure for sizes 4" thru 24", and for 250 psig pressure for 30" thru 54" pipe.

   C. Piping joints and fittings are to be restrained with ductile iron locking segments; inserted through slots in the bell face, to provide a positive axial lock between the bell interior surface and a retainer weldment on the spigot end of the pipe (TR Flex by McWane Ductile restrained joint pipe or equal).

   D. All fitting bends are to be blocked with reinforced concrete thrust blocks, installed in a manner that all locking segments are accessible.

   E. Pipe and fittings are to have bituminous outside coating and inside coating in accordance with ANSI/AWWA C151/A21.51 for pipe and ANSI/AWWA C110/A21.10 for fittings. Pipe and fittings are to be cement lined in accordance with ANSI/AWWA C104/A21.4. Restrained push-on joint pipe and fittings shall be capable of being deflected after assembly.

   F. Backfill: See General Backfill Requirements in Common Work Results for Utilities.

3. DIRECT-BURIED CHILLED WATER PIPING INSULATION

   A. The underground chilled water supply line is to be insulated with a 2" thick layer of Pittsburgh Corning Foamglas 100% rigid cellular glass, jacketed with Pittsburgh Corning Pittwrap CW jacketing or Pittwrap heat sealable jacketing. Fittings and all pipe joints are to be insulated with field cut Foamglass insulation, held in place with glass wrapped reinforced Pittcote 300, or rope stock tape, covered with the Pittwrap jacketing strips, and then covered with a glove coat of Pittcote 300, all according to manufacturer's recommendations. The Chilled water return line does not need to be insulated, except when it is within 3 feet of a steam line, or subject to ambient air conditions.

   B. The successful bidder may use pre-insulated ductile iron piping in lieu of the Pittsburgh Corning Fiberglass insulation specified above. The pre-insulated piping preferred is Perma-Pipe Polytherm, FRP jacketed piping. No pre-insulated PVC or HDPE jacketed piping is allowed.

4. CHILLED WATER PIPING IN VAULTS AND TUNNELS

   A. PIPING SCHEDULE

	Chilled Water	2" – 14"	Schedule 40 Steel	Welded joints and fittings. Flanged valves.*
	Chilled Water	16" and Larger	XS or ½" Wall Steel Pipe	Welded joints and fittings. Flanged valves*

*All piping, fittings, valves shall be rated for 250 psig.

5. VALVES
   A. All chilled water valves shall be butterfly valves rated for 250 psig working pressure.
   B. Flanges shall have weld neck flanges to match up with all valve flanges.
   C. Valves shall be bidirectional and rated for dead-end service.
   D. Valves shall have stainless steel stem and discs with an EPDM seat.
   E. Valves for drains in low points shall be two-piece ball valves. Stainless steel stem and ball.
6. CHILLED WATER PIPING INSULATION IN VAULTS AND TUNNELS
   A. 1-1/2” and smaller: Cryogel: 0.6 inches thick.
   B. 2” and larger: Cryogel: 0.8 inches thick.
   C. Field-applied canvas jacket: Chilled water piping in vaults and tunnels shall also have an 8-ounce canvas jacket applied over insulation for added protection. This jacket must be properly applied with lagging adhesive such that the outer surface is smooth and free of wrinkles. The canvas jacket shall then be prepared for painting.
7. TESTING/CLEANING
   A. The pipe shall be hydrostatically tested to 250 psig. The test shall be held for one hour and be witnessed by a UEM representative.
   B. When successful testing is complete, clean carrier piping according to the following:
      1. Provide flushing and drain connections for complete flushing and drainage of the entire system.
      2. Remove strainers, open all valves and continuously flush the system with clean domestic water until all foreign matter is removed.
      3. Fill and vent the system, adding one pound trisodium phosphate for each fifty gallons of water. Circulate this solution for four hours, then drain and flush the system with clean domestic water.
      4. Provide temporary means and methods to achieve this circulation including pump, hoses, etc.
      5. Replace the strainers and fill the system with clean water, circulate for one hour and test for alkalinity. If the system pH is below 7, add trisodium phosphate until the pH reads 7.8.
      6. Fill underground piping system with permanent system liquid prior to system testing and balancing.

Section 33 6300 | Steam Energy Distribution

8. GENERAL
   A. Piping shall be new, full weight, and of sizes shown on the drawings. Ends of piping shall be reamed, and where applicable, all threads shall be sharp and true.
   B. Piping shall be installed at the locations shown on the construction drawings, properly graded and secured to ensure noiseless circulation throughout the system. Supply and Return piping shall be properly erected to prevent the formation of air and water pockets. Manual drains shall be provided at all low points. Any location on a steam line that holds water shall have a properly

installed dirt leg and steam trap.

C. DIRECT-BURY STEAM LINES ARE NOT ALLOWED, unless space constraints eliminate possibility of a tunnel. Consultant should contact the Utilities & Energy Management, Utility Systems Manager to get approval for direct-buried piping.

D. All underground steam and steam condensate piping should be installed in concrete tunnels, supported by guides, slides, and/or roller hangers, spaced every 10 feet.

E. Tunnels are to be designed to stay dry at all times. Tunnels are to be ventilated with thermostatically controlled fans, with concrete intake and exhaust piping, to keep tunnel temperatures under 95°F and above 40°F.

F. Design of guides, anchors, and piping supports shall ensure that the thermal expansion of piping is in the axial direction. Thermal expansion of the piping must be adequately compensated with conservatively designed expansion compensators rated for twice the anticipated travel (at 500°F). Piping during heat-up and cool-down shall stay centered on rollers, centered through guides, and centered through expansion compensators. Design should make every effort to ensure that the piping grows and shrinks without binding through compensators or support systems, and that sufficient anchoring is provided to withstand a hydrostatic test pressure of 450 psig.

G. All steam pipe, fittings, equipment, expansion compensators, etc. must be rated for 300 psig steam working pressure, at a temperature of 500°F.

H. All valves, flanges, expansion joints, steam trap lines, drains, vents, etc., must be accessible, by adequately sized manholes and steam pits. Access for maintenance must be provided for all expansion compensators, flanges, and threaded fittings on the steam piping, and this access must not require any excavation.

I. Steam traps shall be provided at a maximum spacing of every 300 feet. Engineer shall submit condensate load calculations for spacing over 300 feet.

9. UNDERGROUND STEAM AND CONDENSATE PIPING (IN TUNNELS AND VAULTS)

A. PIPE SCHEDULE

	Medium and High Pressure Steam	8” and smaller	ASTM A53/A53M Schedule 80 black steel pipe	Welded joints and fittings. Schedule 80 weld-end valves.
	Medium and High Pressure Steam	10” and larger	ASTM A53/A53M ½” wall, black steel pipe	Welded joints and fittings. Schedule 80 weld-end valves.
	Steam Condensate	All sizes	ASTM A53/A53M Schedule 80	Welded or threaded joints and fittings. Schedule 80 weld-end valves.

10. ABOVEGROUND PIPING INSULATION IN MANHOLES, VAULTS, AND TUNNELS

A. LOW PRESSURE STEAM, RETURN, AND PUMPED CONDENSATE, 30 PSIG:

1. NPS 1½ and Smaller: Insulation shall be the following: Aerogel: 0.8 inch thick.
2. NPS 2 and above: Insulation shall be the following: Aerogel: 0.8 inch thick.

B. HIGH PRESSURE STEAM AND RETURN, 76 PSIG AND ABOVE:

1. NPS 1½ and Smaller: Insulation shall be any of the following: Aerogel: 0.8” thick.
2. NPS 2” - 4”: Insulation shall be any of the following: Aerogel: 1.2 inches thick.

3. NPS 5” and larger: Insulation shall be any of the following: Aerogel: 1.2 inches thick.

C. FIELD-APPLIED CANVAS JACKET

1. Steam piping in vaults and tunnels shall also have an 8-ounce canvas jacket applied over insulation for added protection. This jacket must be properly applied with lagging adhesive such that the outer surface is smooth and free of wrinkles. The canvas jacket shall then be prepared for painting.

11. DIRECT-BURIED STEAM PIPING **(IF APPROVED**)

A. Direct-bury underground steam and high pressure return piping shall be Perma-Pipe Multi-therm 500 or equal, pre-insulated piping systems, consisting of an extra strong class, black steel carrier pipe, insulated with Pyrogel® XT-E insulation, contained within a drainable, dryable, pressure tested, Class A, 10 gauge (minimum) steel conduit. All carrier and steel conduit sections are to be welded, no threaded piping allowed in direct bury applications. The conduit is also to be insulated with a 1” layer of polyurethane foam and jacketed with fiberglass (FRP). The fiberglass is to be applied to the urethane foam with a multidirectional filament winding process to eliminate voids and to produce a high strength, high temperature fiberglass jacket, to ensure maximum corrosion protection and strength.

CARRIER PIPE THICKNESS (A106, Grade B seamless steel piping)				
PIPE SIZE	WALL THICKNESS	PYROGEL INSULATION THICKNESS	CONDUIT SIZE	GAUGE
2”	.218” sch. 80	.79”	6-5/8”	10
4”	.337” sch. 80	1.1”	8-5/8”	10
6”	.432” sch. 80	1.3”	12-3/4”	10
8”	.500” sch. 80	1.5”	14”	10
10”	.500” sch. 60	1.5”	16”	10
12”	.500”	1.7”	18”	10
14”	.500”	1.7”	20”	10
16”	.500” sch. 40	1.7”	22”	10
18”	.500”	1.9”	24”	10
20”	.500” sch. 30	1.9”	26”	10

Note: Expansion loops and fittings to have oversized conduit and special spacer supports, which allow for movement of the pipe without damaging the piping insulation.

B. Pipe supports: The service piping within the outer steel conduit is to be supported with spacer support assemblies at no more than 10 foot intervals. These supports are to be designed to allow continuous airflow and drainage of the conduit in place.

C. The straight supports shall be designed to occupy less than 10% of the annular air space. Supports shall be of the type where insulation thermally isolates the carrier pipe from the outer conduit. The surface of the insulation shall be protected at the support by a sleeve not less than 12” long, fitted with traverse and rotational arresters.

D. Service pipe insulation: Shall be Pyrogel® XT-E. Split insulation shall be held in place by stainless steel bands and clips installed not more than 18” apart. Insulation shall have passed the boiling test requirements specified in the Federal Agency Guidelines for Class A systems.

E. Outer Conduit Insulation and Jacket: Conduit insulation shall be spray applied polyurethane foam, having a nominal 2 lb/ft3 density for all straight lengths and fittings. The insulation thickness shall

be 1”. Factory Quality assurance procedures for the insulation shall include X-ray, infrared, and/or visual checks prior to jacketing of the entire length of the piping to ensure that there are no insulation voids. The urethane foam shall have the minimum characteristics of 0.16 K-Factor, density of 2 lb./ft3 and a closed cell content of 90 to 95%. The outer jacket shall be fiberglass (FRP) and shall be applied directly onto the urethane foam insulation. No PVC or Polyethylene jackets shall be allowed. All straights and fittings shall be factory jacketed.

F. Installation: The installing contractor shall handle the system in accordance with the directions furnished by the manufacturer and as approved by the Architect or Engineer. The casing shall be air tested to 15 psig, and service pipe shall be hydrostatically tested to 450 psig. The test pressure shall be held without a pressure drop for not less than one hour.

G. Field joints shall consist of field-installed Pyrogel XTE insulation applied in staggered layers and held in place with stainless steel bands, a connector sleeve for the conduit, field-applied foam insulation and a polyethylene heat shrink wrap. Heat shrink wrap shall be Sleeve-Gard 80 or Canusa Wrap Model WLNN. Backfill around all field joints with a minimum of 8” of Gilsulate in all directions.

H. Backfill: See General Backfill Requirements in Common Work Results for Utilities.

12. DIRECT-BURIED STEAM CONDENSATE PIPING (**IF APPROVED**)

A. All underground steam condensate return piping shall be Perma-Pipe Poly-Therm pre-insulated piping or equal, consisting of a Schedule 80, seamless, Grade B, A106, black steel carrier pipe, with a spray applied 1” of layer polyurethane foam insulation, and jacketed with a filament wound polyester resin/fiberglass reinforcement composite (FRP) directly applied on the insulating foam. Thermoplastic casing material, e.g., PVC or Polyethylene jacketing shall not be allowed. The minimum thickness for the FRP jacket shall be 0.55” inches.

B. Field joints shall consist of field-installed Pyrogel XTE insulation applied in staggered layers and held in place with stainless steel bands, a connector sleeve for the conduit, field-applied foam insulation and a polyethylene heat shrink wrap. Heat shrink wrap shall be Sleeve-Gard 80 or Canusa Wrap Model WLNN. Backfill around all field joints with a minimum of 8” of Gilsulate in all directions.

C. No underground condensate return piping shall have an internal diameter of less than 2”.

D. All underground steam condensate piping is to be welded at each joint.

E. Polyurethane Foam Insulation Thicknesses

2” thru 6” - 1” thick

8” and above - 1 ½” thick

F. Backfill: See General Backfill Requirements in Common Work Results for Utilities.

13. VALVES

A. High pressure steam and steam condensate valves for pressures greater than 50 psig: All valves rated for 300 psig and 500 F. Pumped discharge return valves to be Class 150.

B. Valves for high pressure steam, high pressure steam condensate, and pumped discharge return are to be triple offset, high performance, rotary valves suitable for dead-end service, weld ends, Type 316 stainless steel disc, laminated Type 316 stainless steel and graphite seat, external valve-stem packing adjustment.

1. Valves shall be quarter turn and shall be designed in accordance with ASME B16.34 and B31.3.
2. Valves shall be tested in accordance with ASME B16.34-1996 and API 598-1996.
3. Operator for All Sizes: Gear operator with position indicator. Handle shall have nut adapter to allow for operation from above ground with T-handle valve wrench. Position handle accordingly.

C. Manufacturers: Subject to compliance with requirements, available manufacturers offering products that may be incorporated into the Work include, and are limited to, the following:
Adams

D. Provide isolation valves at all branches leaving a vault. Provide end of main traps on the outlet side of all isolation valves at the low points.
1. Valves at end of mains and drains are to be gate valves.

E. Spring check valves are prohibited.

14. TESTING/CLEANING

A. The steam and high pressure return system shall be hydrostatically tested to 450 psig. The test shall be held for one hour and witnessed by a UEM representative.

B. The low pressure return system shall be hydrostatically tested to 200 psig. The test shall be held for one hour and witnessed by a UEM representative.

C. The casings shall be air tested to 15 psig. The test shall be held for one hour and witnessed by a UEM representative.

D. When successful testing is complete, clean carrier piping according to the following:
1. Provide flushing and drain connections for complete flushing and drainage of the entire system.
2. Remove strainers, open all valves and continuously flush the system with clean domestic water until all foreign matter is removed.
3. Fill and vent the system, adding one pound trisodium phosphate for each fifty gallons of water. Circulate this solution for four hours, then drain and flush the system with clean domestic water.
4. Provide temporary means and methods to achieve this circulation including pump, hoses, etc.
5. Replace the strainers and fill the system with clean water, circulate for one hour and test for alkalinity. If the system pH is below 7, add trisodium phosphate until the pH reads 7.8.
6. Fill underground piping system with permanent system liquid prior to system testing and balancing.

REVISION DATE	PAGES	REMARKS
November 12, 2024	5	Added Valves section of Chilled Water
July 8, 2025	Multiple	Combined vaults into single section, updated sump pump, fan, electrical, water level monitoring, and other small modifications. Required vent material to be RCP for all vaults. Clarified expectation of clearances and locations of EOMs and drains. Other small modifications.
March 30, 2026	All	Updated TR Flex Manufacturer Required sump pumps to be on GFCI receptacle Disallowed plastic sanitary or storm structures within 20’ of steam or steam condensate Disallowed spring check valves on the steam system Required drains at on all branches in chilled water vaults Verified document meets ADA digital accessibility requirements
November 13, 2026	2, 13	Grate requirements added. Utility marker updated.

Attachment 1 | Utility Marker Detail

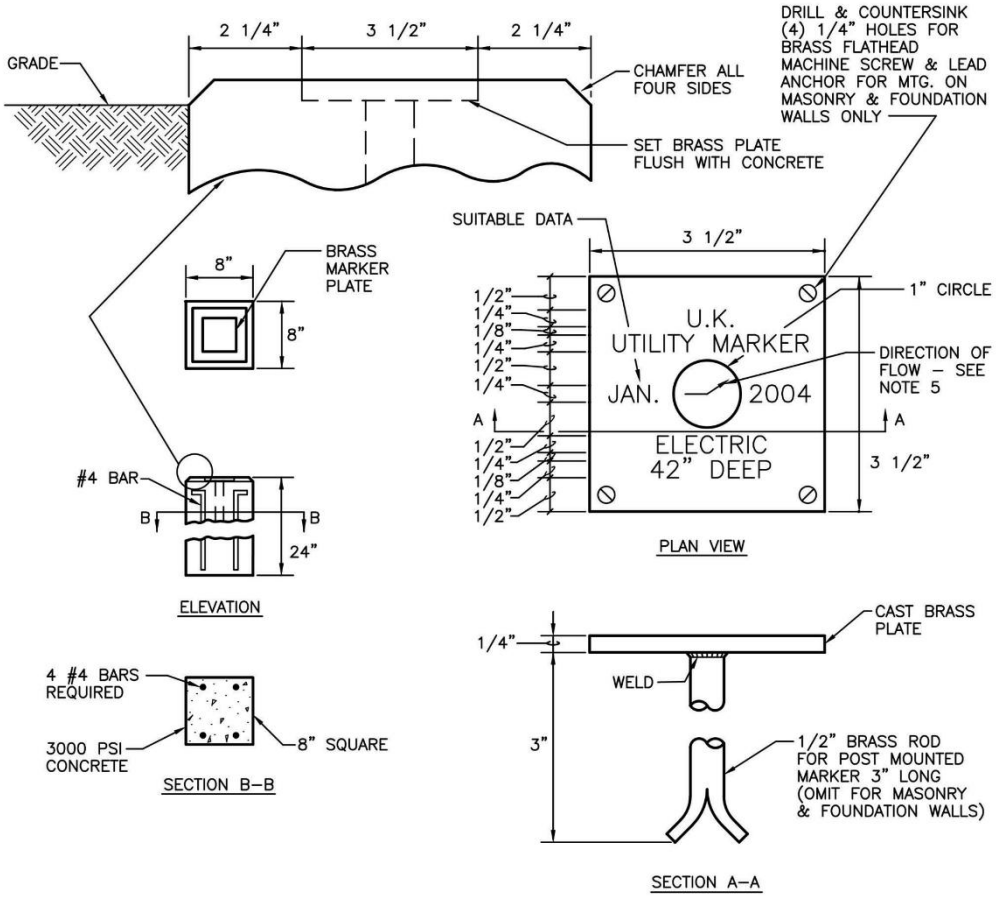

Attachment 2 | Steam Vault Detail Example

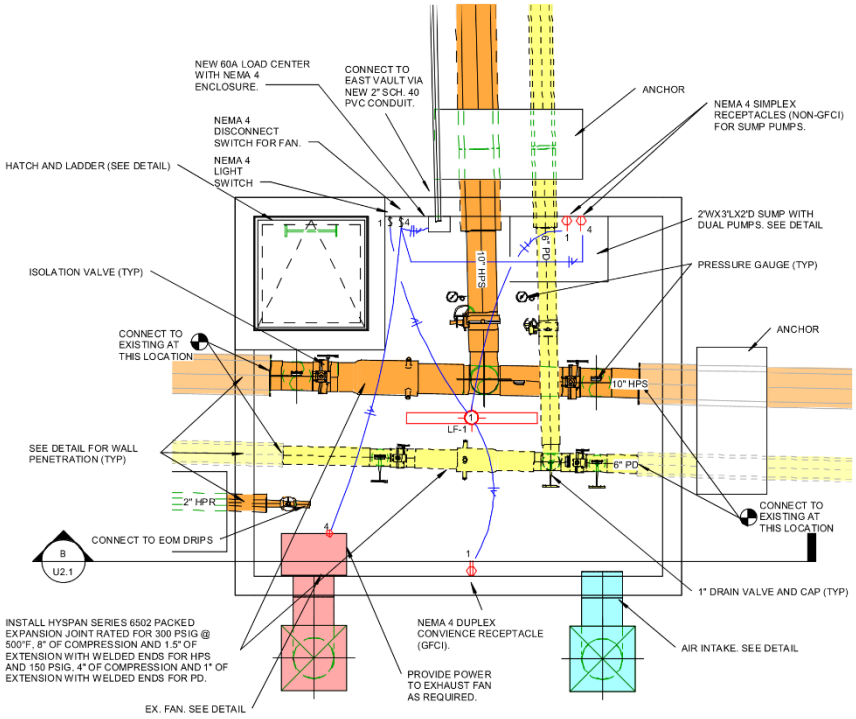

2 U2.1 ENLARGED WEST VAULT - WASHINGTON
SCALE: 3/8" = 1'-0"

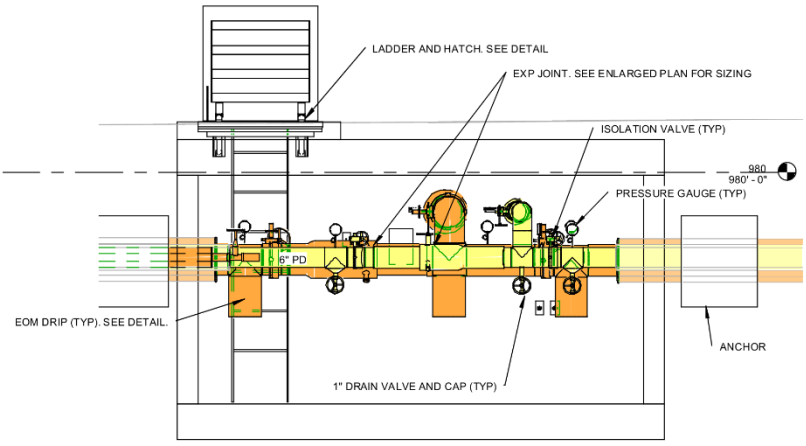

B U2.1 SECTION B
SCALE: 3/8" = 1'-0"

Attachment 3 | Chilled Water Vault Detail Example

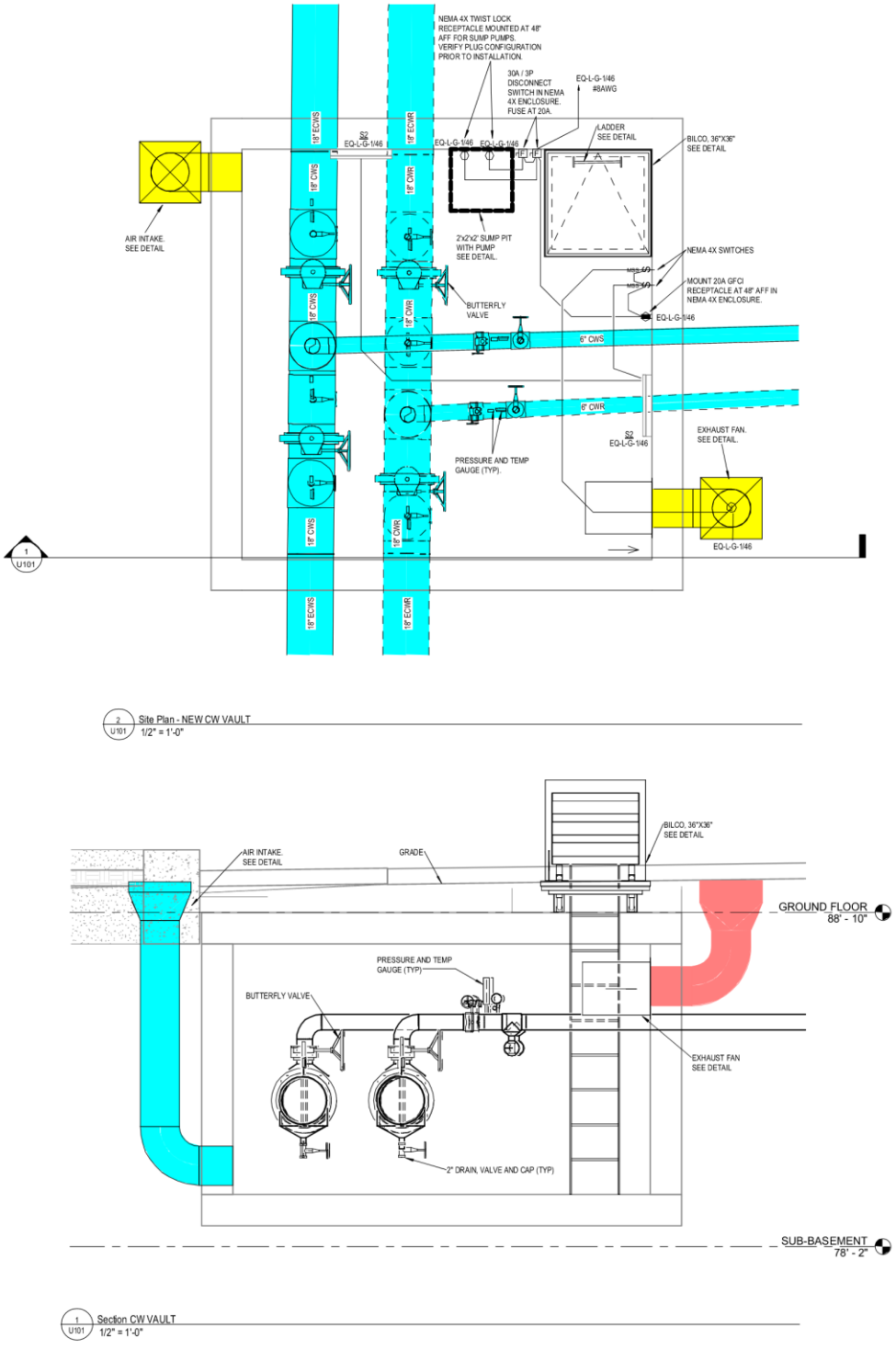

Attachment 4 | Vault Ventilation Detail Example

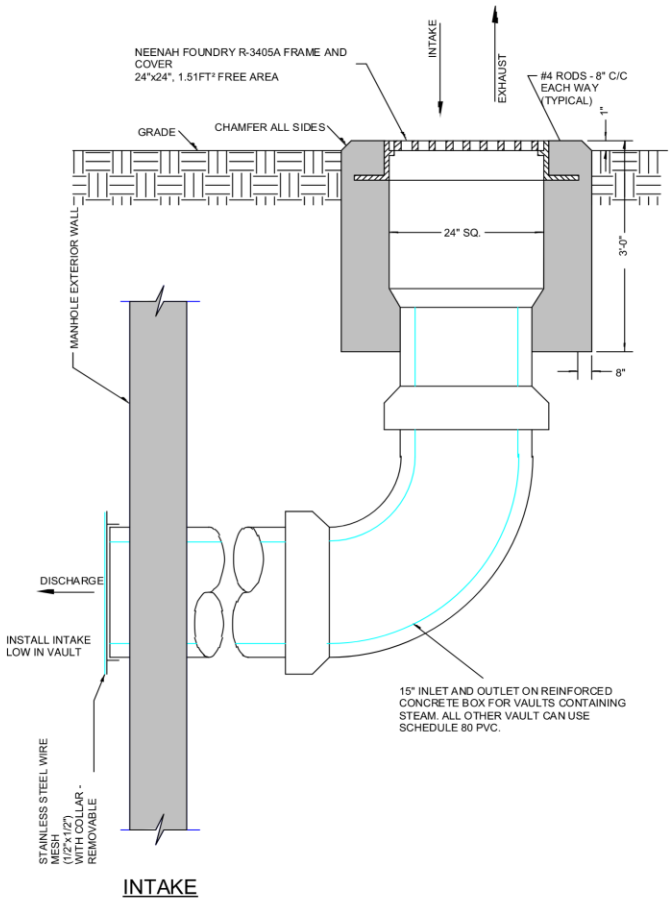

INTAKE

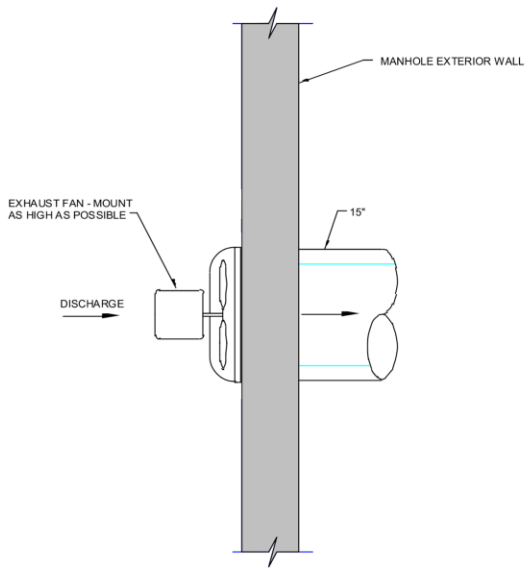

EXHAUST

Attachment 5 | Expansion Joint Vault Detail Example

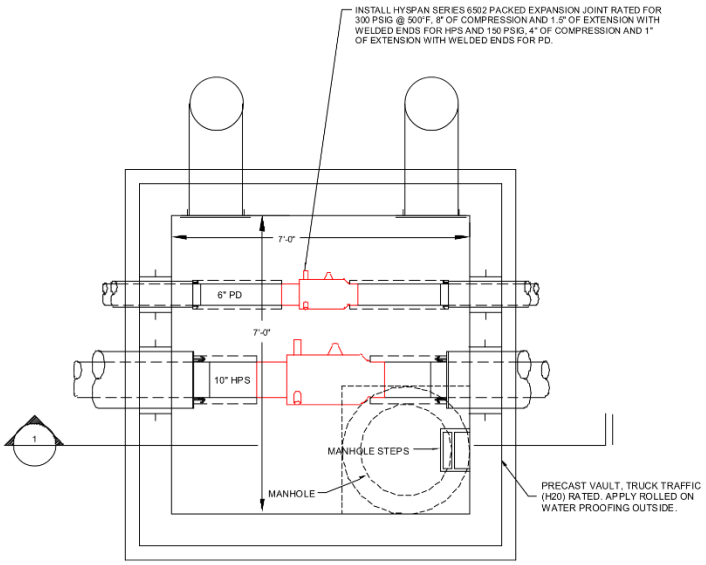

EXPANSION JOINT VAULT
SCALE: NONE

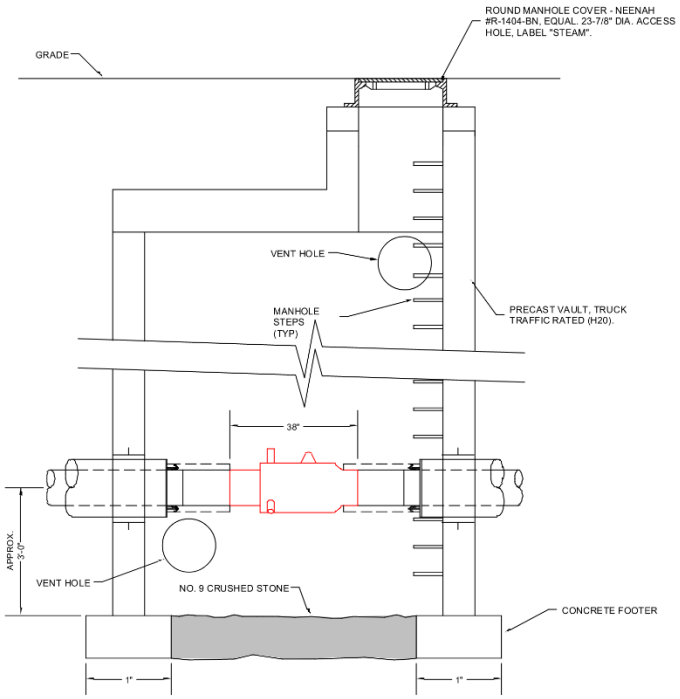

EXPANSION JOINT VAULT SECTION -1
SCALE: NONE

*Vault may require concrete bottom and sump pump dependent on location.

Attachment 6 | End of Main Drip Detail

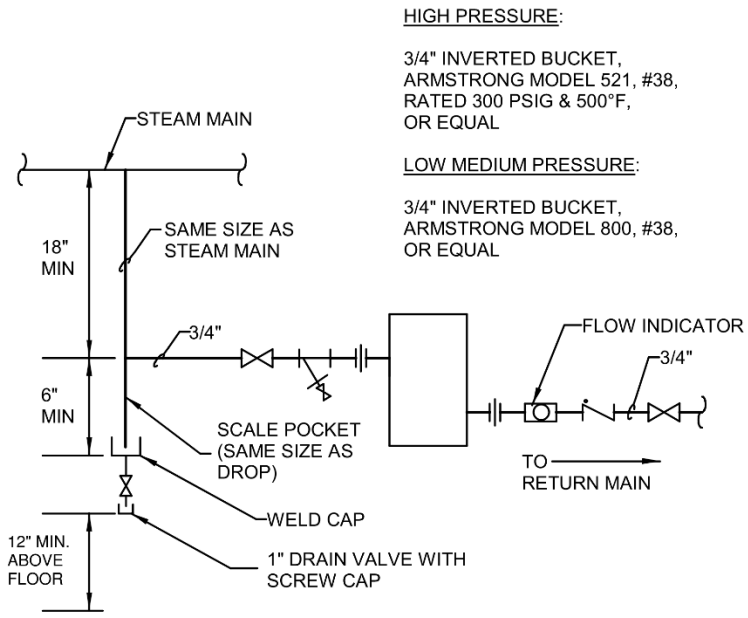

END OF MAIN DRIP DETAIL

SCALE: NONE

Attachment 7 | Steam and Condensate Penetration Details

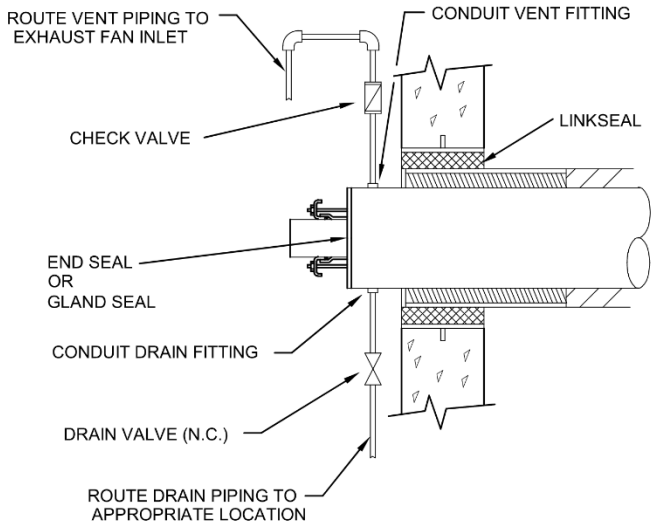

HPS/HPR WALL PENETRATION DETAIL

SCALE: NONE

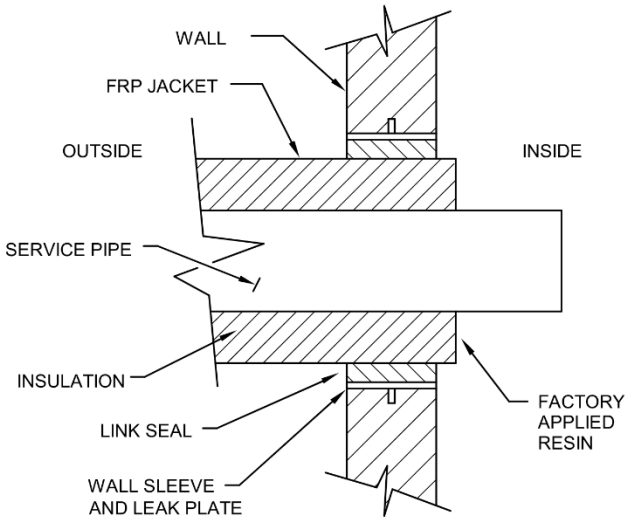

PD WALL PENETRATION DETAIL

SCALE: NONE